Rail A55

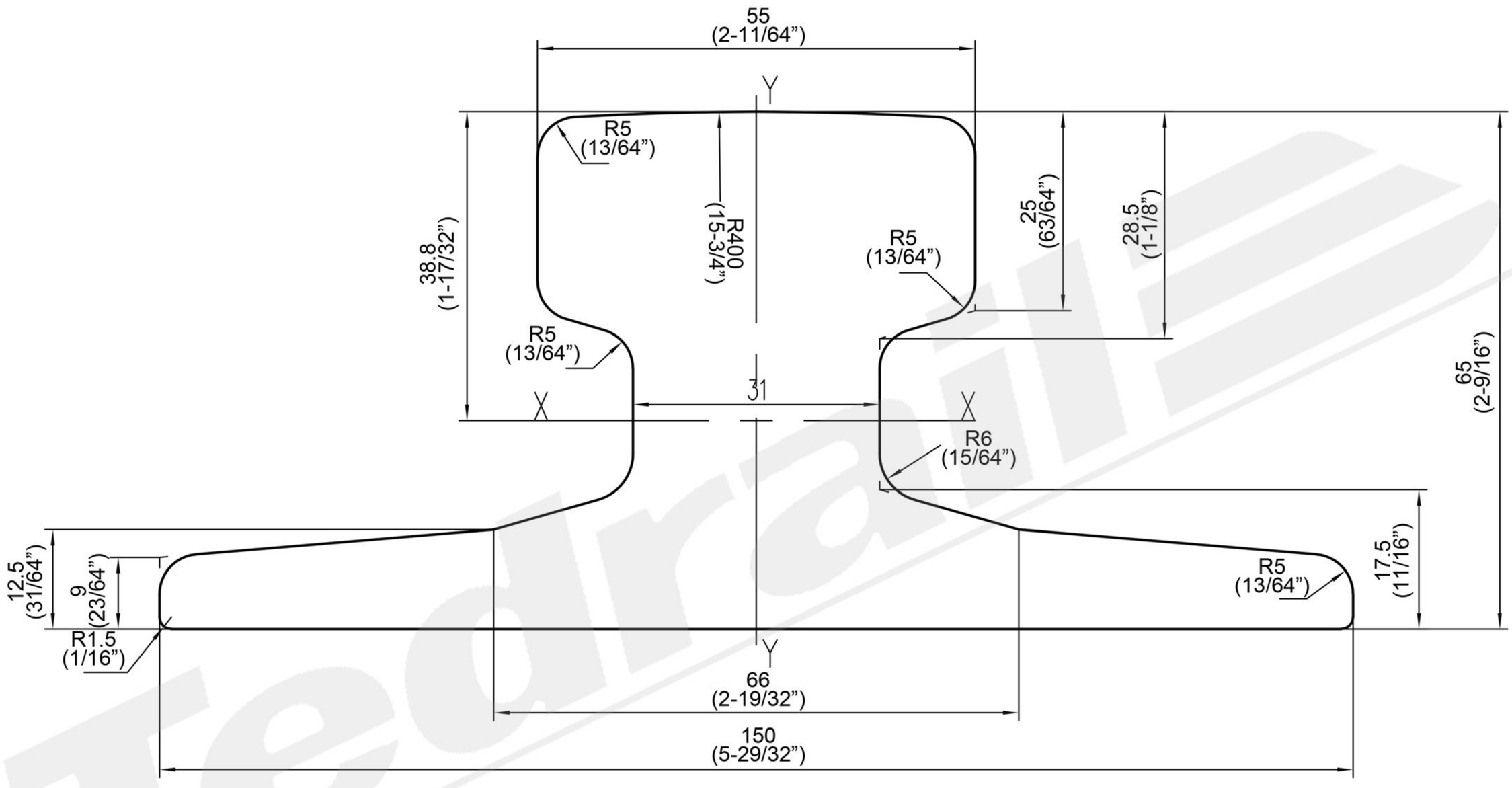

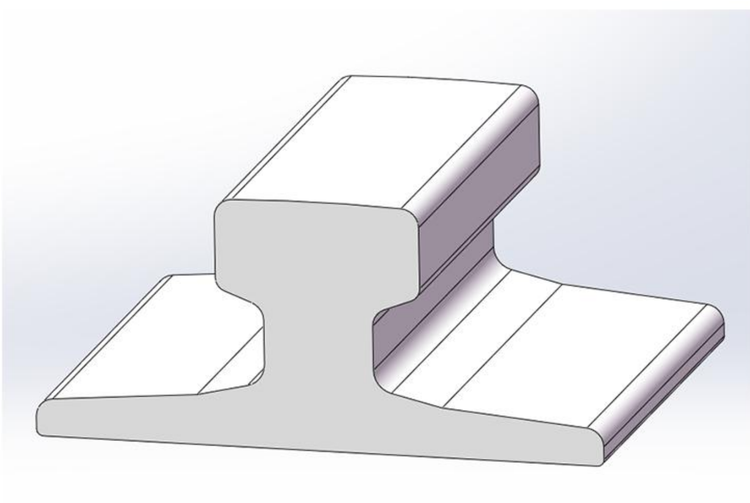

Drawing.No: TR-90-02-033

Weight: 31.80kg/m (70lbs/yd)

Area Section: 40.70cm^2 (6.30pulg^2)

Section Modulus I/V (Head): 46.90cm^3 (2.86pulg^3)

Section Modulus I/V (Base): 68.60cm^3 (4.19pulg^3)