Rail 90ARA-A

Tedrail

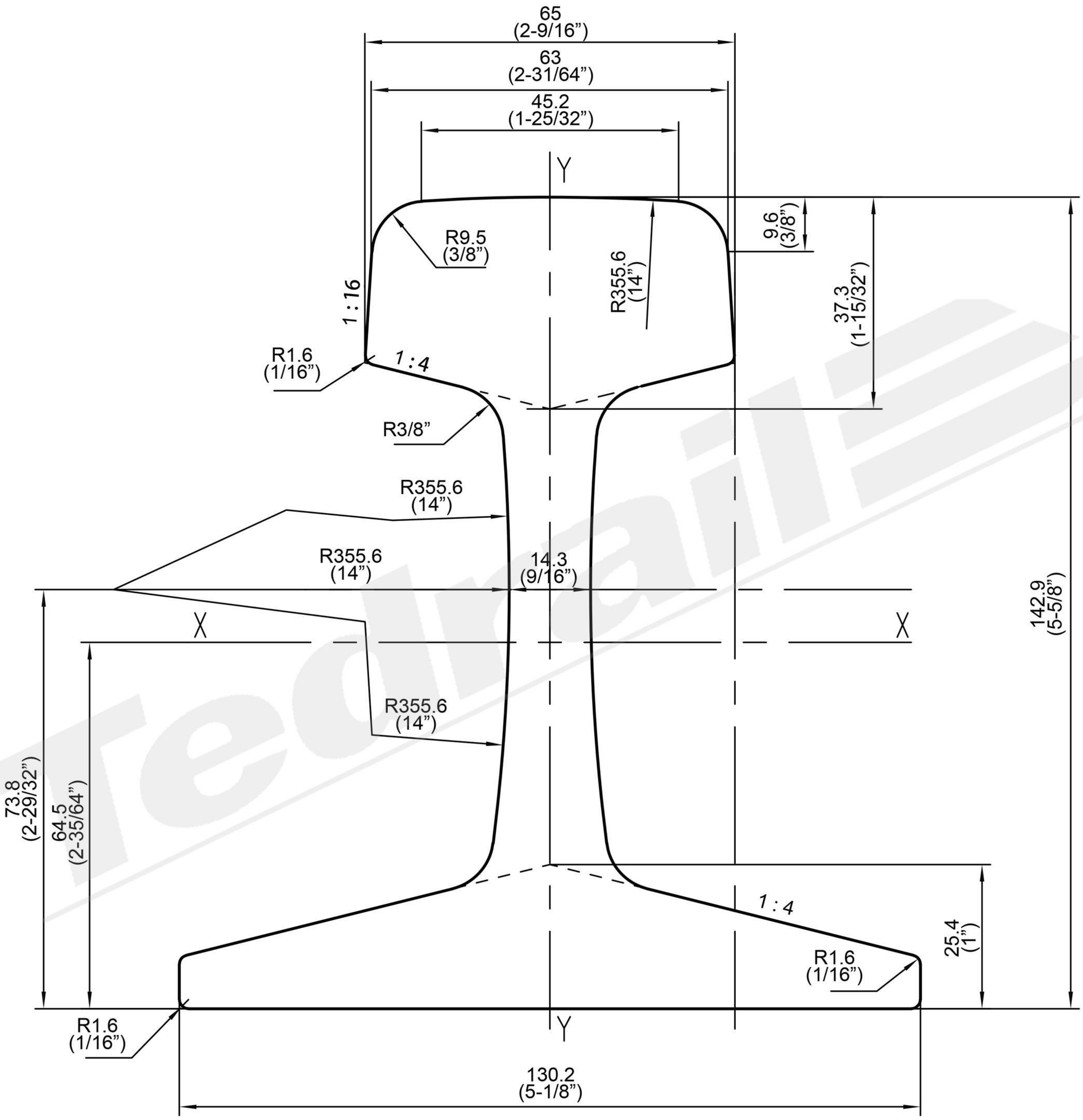

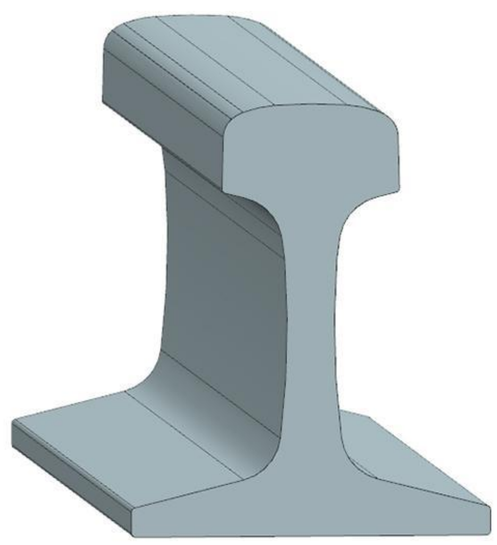

Drawing.No: TR-90-02-001

Weight: 44.65kg/m

Area Section: 56.90cm^2 (8.82pulg^2)