# Rail CR135

Tedrail

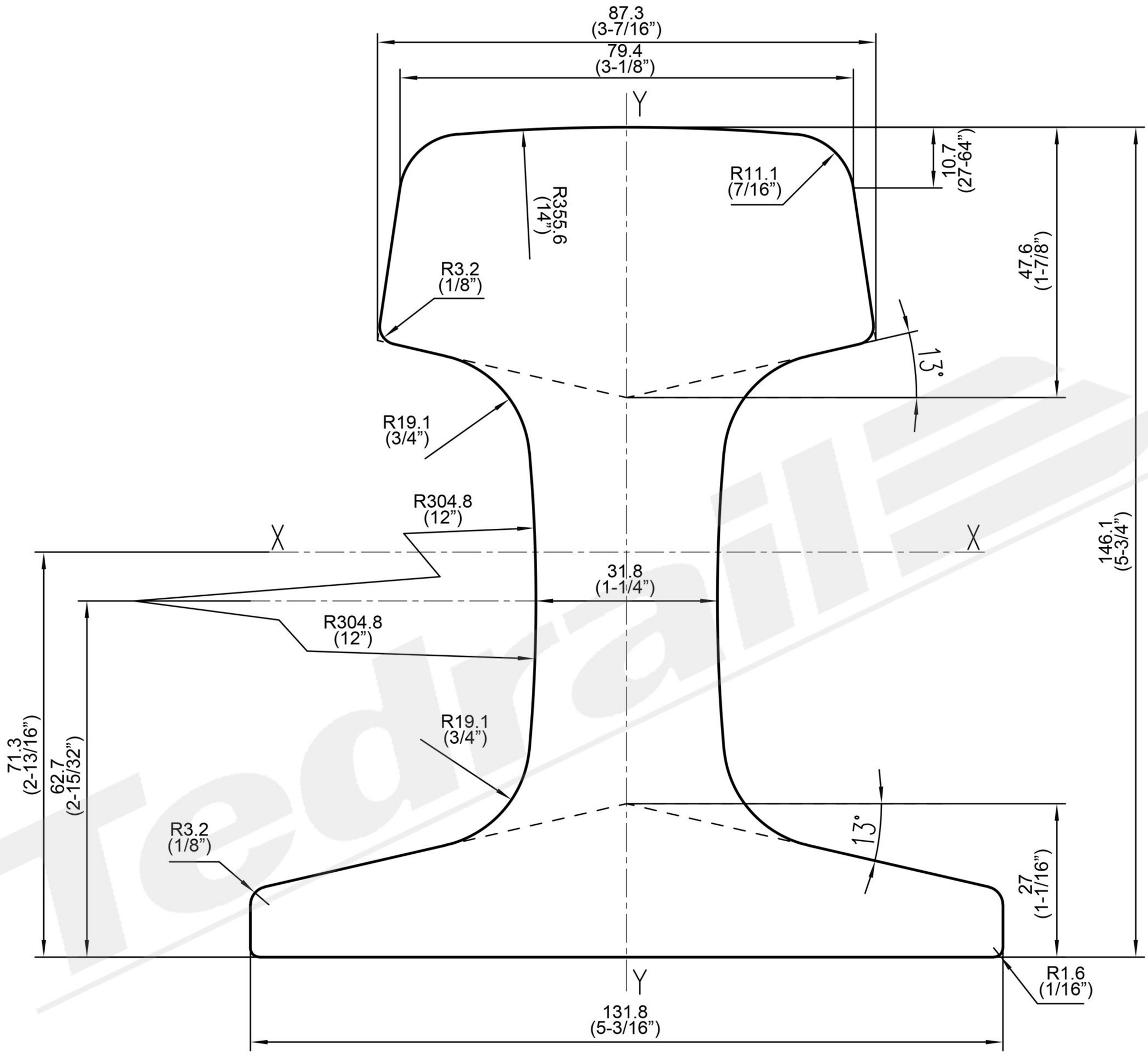


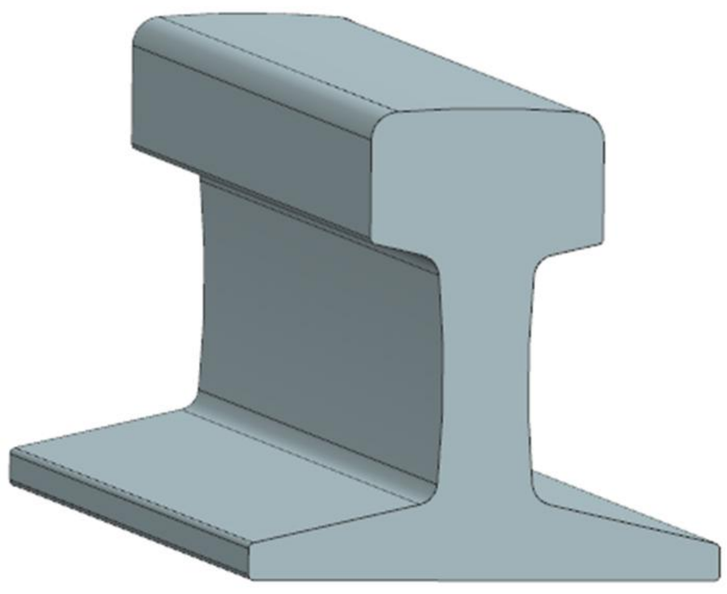

Drawing.No: TR-90-02-009

Weight: 66.97kg/m (135lbs/yd)

Area Section: 85.80cm$^2$ (13.32pulg$^2$)

Section Modulus I/V (Head): 281.86cm$^3$ (17.20pulg$^3$)

Section Modulus I/V (Base): 295.29cm$^3$ (18.02pulg$^3$)